AUTOVALVE
Since 1983

氣動開關型二片式牙口球閥
PNEUMATIC 2-PIECE SCREWED BALL VALVES

ITALY製
AT系列
閥BV-S1,S2,SY

SIL3 IEC 61508 / IEC 61511

ATEX

IP67

CE

AIR TORQUE



適用流體

- 水、空氣、弱酸性液體
- 80°C以下熱水
- 可選配-40°C冰水用
- 可選配蒸氣用
- 可選配高壓用
- 可選配超高溫用

Applicable Fluids

- Water, Air, Mildly acidic liquids
- Hot water below 80°C
- Optional for chilled water down to -40°C
- Optional for steam
- Optional for high pressure
- Optional for ultra-high temperature

規格 / Specification		
閥類型 / Valve Type	二片式牙口球閥 / 2-Piece Screwed Ball Valves	
驅動器型號 / Actuator Model	AT045UDA / AT101UDA / AT201UDA	AT045USR / AT051USR / AT101USR / AT201USR / AT251USR
驅動器類型 / Actuator Type	雙動 / Double Acting	單動 / Single Acting
操作媒介 / Operating Media	壓縮乾燥空氣 / Compressed Dry Air	
操作壓力 / Operating Pressure	4 ~ 6kg/cm² (最大8bar / Maximum 8 Bar)	
認證 / Certification	SIL3 , ATEX , IP67 , CE	
流體溫度 / Fluid Temperature	-10°C ~ 80°C	
閥體耐壓 / Valve Pressure Rating	1000 psi	
材質 / Material	閥體/Body : SUS316/SUS316L ｜ 閥球/Ball : SUS316 ｜ 球墊/Ball Seat : PTFE	
配件 / Accessory	氣控電磁閥 / Solenoid Valve ,限位開關盒 / Limit Switch Box , 二點組合(調壓濾水組) / Air Filter Regulator ,定位器 / E/P Positioner	

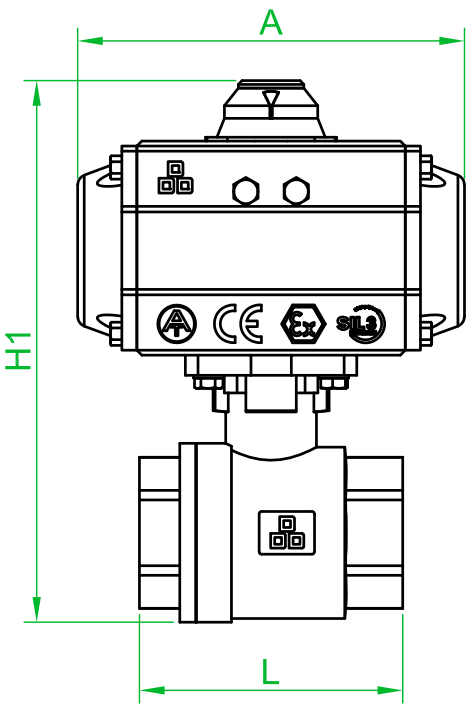

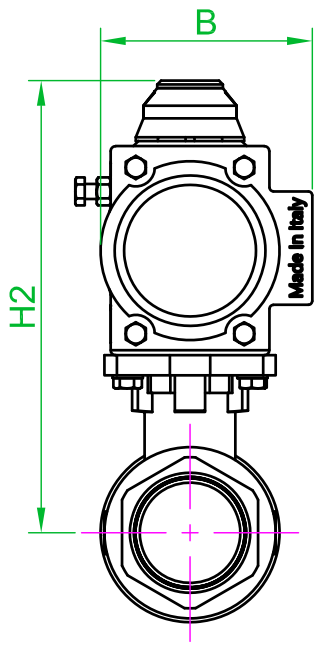

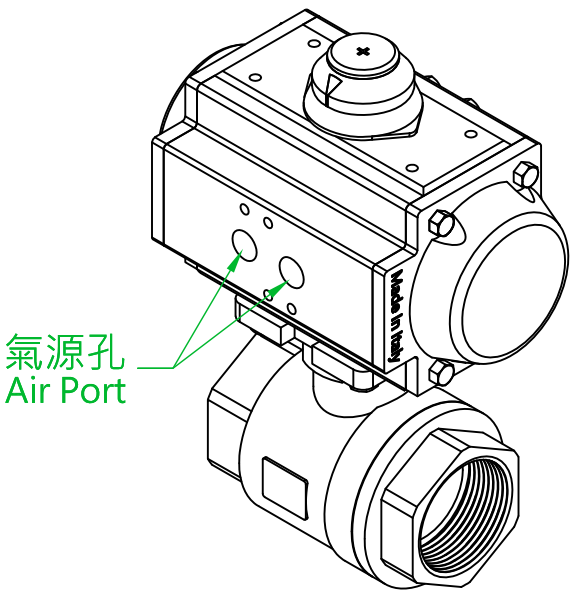

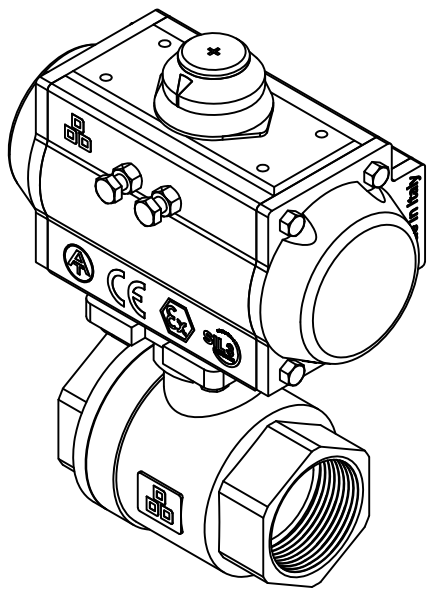

尺寸 / Dimension (單位 / Units : mm)															
驅動器類型 / Actuator Type	雙動 / Double Acting								單動 / Single Acting						
氣源孔 / Air Port	1/8"PT					1/4"PT			1/8"PT			1/4"PT			
驅動器型號 / Actuator Model	AT045UDA					AT101UDA		AT201UDA	AT045USR			AT051USR	AT101USR		AT201USR	AT251USR
閥型號 / Valve Model	06S2	10S2	15S1	20S1	25S1	32SY	40S2	50S1	06S2	10S2	15S1	20S1	25S1	32SY	40S2	50S1
閥尺寸 / Valve Size	8A (1/4")	10A (3/8")	15A (1/2")	20A (3/4")	25A (1")	32A (1-1/4")	40A (1-1/2")	50A (2")	8A (1/4")	10A (3/8")	15A (1/2")	20A (3/4")	25A (1")	32A (1-1/4")	40A (1-1/2")	50A (2")
L	50.5	62	62	68	80	96	105	120	50.5	62	62	68	80	96	105	120
A	118					154		205	118			136	154		205	242
B	62					84		92	62			71	84		92	105
H1	139	146	144	153	165	194	215	243	139	146	144	156	184	194	232	256
H2	123	128	126	132	140	163	180	199	123	128	126	135	159	163	197	212